BEVERAGE-AIR

Project: _____	AIA#
Item: _____	
Location: _____	SIS#
Approved: _____	

DZ BAR EQUIPMENT-DUAL ZONE

DZ58 Dual-Zone Solid Doors and Pull-out Keg Drawer

MODEL:
DZ58-1-B-1
DZ58-1-S-1

DZ58-1-B-1

DZ58-1-S-1

OPTIONS & ACCESSORIES

- ☐ Glass door models
- ☐ Sub-top model available
- ☐ Tap Locks
- ☐ 1-4 Tap insulated stainless towers/taps
- ☐ Glass rinser
- ☐ 3" Casters

*Not intended for beer/beer configuration

3 Year Parts/Labor Warranty
Additional 2 Year Compressor Warranty

CABINET CONSTRUCTION

- Black or stainless steel exterior & interior finishes available
- Stainless steel top
- Stainless steel drip tray for easy cleaning
- Full electronic control
- Dual–zone models feature 2 independent compartments that allow independent temperature in each section
- Left hand compartment maintains 32º-40ºF, Right hand maintains 50º-65ºF *
- Unit has a minimum variance of +/-15ºF, and maximum of 20ºF depending on condition
- LED lighting, standard
- Door and drawer locks
- Snap-in door gaskets
- Magnetic gaskets provides positive door and drawer sealing
- Self-closing door
- Two (2) heavy-duty epoxy coated shelves on right
- One (1) pull-out keg drawer on left
- Keg drawer holds up to (4) 1/6 size kegs
- 3" Insulated tower with dual faucet, standard

REFRIGERATION SYSTEM

- Refrigeration system uses R134a refrigerant to comply with all environmental concerns
- Automatic, non-electric evaporator
- Epoxy coated evaporator coil

DZ58 Dual-Zone: Bar Equipment

3779 Champion Blvd., Winston-Salem, NC 27105
1-888-845-9800 Fax: 1-336-245-6453
Beverage-Air.com sales@bevair.com

BEVERAGE-AIR

Bar Equipment - Dual-Zone

Models: DZ58-1-B-1, DZ58-1-S-1

MODEL	DZ58-1-B-1	DZ58-1-S-1
EXTERNAL DIMENSIONAL DATA		
Width Overall	59”	59”
Depth Overall with Handle	29 3/4”	29 3/4”
Height Overall	52 1/2”	52 1/2”
Door Opening	21 1/8” x 30”	21 1/8” x 30”
Depth with Door Open 90°	50 1/2”	50 1/2”
Number of Doors	1	1
Depth with Drawer Extended	52 5/8”	52 5/8”
Number of Keg Drawers	1	1
INTERNAL DIMENSIONAL DATA		
NET Capacity (cubic ft.)	20.354	20.354
Internal Width Overall (in)	(L) 22 1/8” (R) 21 1/4”	(L) 22 1/8” (R) 21 1/4”
Internal Depth Overall (in)	23 1/8”	23 1/8”
Internal Height Overall (in)	32”	32”
Number of Shelves	2	2
Number of Kegs (1/6) per section	4	4
ELECTRICAL DATA		
Full Load Amperes 115/60/1	7.4	7.4
REFRIGERATION DATA		
Horsepower	3/4	3/4
WEIGHT DATA		
Gross Weight (Crated lbs)	562 lbs	562 lbs
Height - Crated	45.5”	45.5”
Width - Crated	62”	62”
Depth - Crated	32”	32”

Model Views

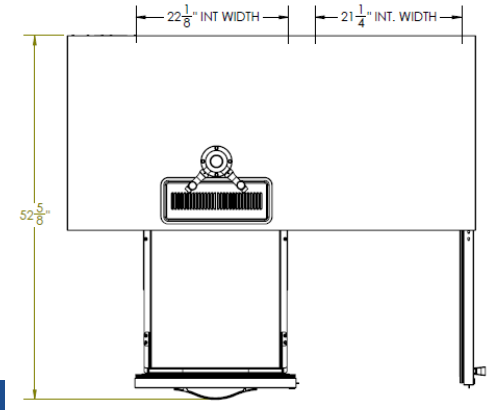

Plan View

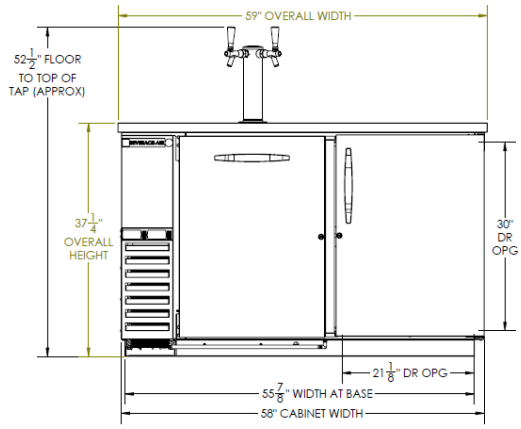

Elevation View

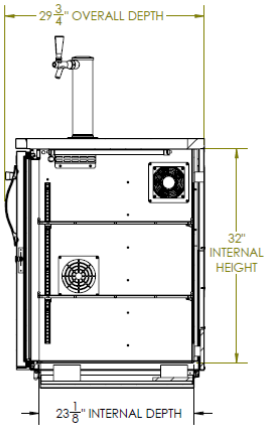

Side View

ELECTRICAL CONNECTION

115/60/1
NEMA-5-15P

Units pre-wired at factory and include 8’ long cord and plug set.

3779 Champion Blvd., Winston-Salem, NC 27105
1-888-845-9800 Fax: 1-336-245-6453
Beverage-Air.com sales@bevair.com